User Manual

WARNING

FOR YOUR OWN SAFETY, PLEASE READ THIS USER MANUAL CAREFULLY BEFORE YOUR INITIAL START-UP!

- Before your initial start-up, please make sure that there is no damage caused during transportation.
- Should there be any damage, consult your dealer and do not use the equipment.
- To maintain the equipment in good working condition and to ensure safe operation, it is necessary for the user to follow the safety instructions and warning notes written in this manual.
- Please note that damages caused by user modifications to this equipment are not subject to warranty.

CAUTION!
KEEP THIS EQUIPMENT AWAY FROM RAIN, MOISTURE AND LIQUIDS

CAUTION!
TAKE CARE USING THIS EQUIPMENT!
HIGH VOLTAGE-RISK OF ELECTRIC SHOCK!!

IMPORTANT:

The manufacturer will not accept liability for any resulting damages caused by the non-observance of this manual or any unauthorised modification to the equipment.

- Never let the power cable come into contact with other cables. Handle the power cable and all mains voltage connections with particular caution!
- Never remove warning or informative labels from the unit.
- Do not open the equipment and do not modify the unit.
- Do not connect this equipment to a dimmer pack.
- Do not switch the equipment on and off in short intervals, as this will reduce the system's life.
- Only use the equipment indoors.
- Do not expose to flammable sources, liquids or gases.
- Always disconnect the power from the mains when equipment is not in use or before cleaning! Only handle the power-cable by the plug. Never pull out the plug by pulling the power-cable.
- Make sure that the available mains supply voltage is between 100~240V AC, 50/60Hz.
- Make sure that the power cable is never crimped or damaged. Check the equipment and the power cable periodically.
- If the equipment is dropped or damaged, disconnect the mains power supply immediately and have a qualified engineer inspect the equipment before operating again.
- If the equipment has been exposed to drastic temperature fluctuation (e.g. after transportation), do not connect power or switch it on immediately. The arising condensation might damage the equipment. Leave the equipment switched off until it has reached room temperature.
- If your product fails to function correctly, stop use immediately. Pack the unit securely (preferably in the original packing material), and return it to your Pro Light dealer for service.
- Only use fuses of same type and rating.
- Repairs, servicing and power connection must only be carried out by a qualified technician. THIS UNIT CONTAINS NO USER SERVICEABLE PARTS.
- This lighting fixture is for professional use only - it is not designed for or suitable for household use. The product must be installed by a qualified technician in accordance with local territory regulations. The safety of the installation is the responsibility of the installer. The fixture presents risks of severe injury or death due to fire hazards, electric shock and falls.
- Warning! Risk Group 2 LED product according to EN 62471. Do not view the light output with optical instruments or any device that may concentrate the beam.
- WARRANTY: One year from date of purchase.

OPERATING DETERMINATIONS

If this equipment is operated in any other way, than those described in this manual, the product may suffer damage and the warranty becomes void. Incorrect operation may lead to danger e.g: short-circuit, burns and electric shocks etc.

Do not endanger your own safety and the safety of others!

Incorrect installation or use can cause serious damage to people and/or property.

Product overview & technical specifications

The features 8 moving gobos that criss-cross the room, whilst changing colour, creating an awesome effect. These razor sharp red, green, blue and white beams project over wide areas to enhance lightshows making them ideal for mobile DJs, bars and small entertainment venues.

- 8 x 3W LEDs (R: 2, G: 2, B: 2, W: 2)
- DMX channels: 8
- Auto, sound active and master/slave modes
- 0 - 100% dimming and variable strobe
- Supplied with hanging bracket
- 4 push button menu with LED display
- IEC power input/output
- 3-Pin XLR input/output
- Fan cooled

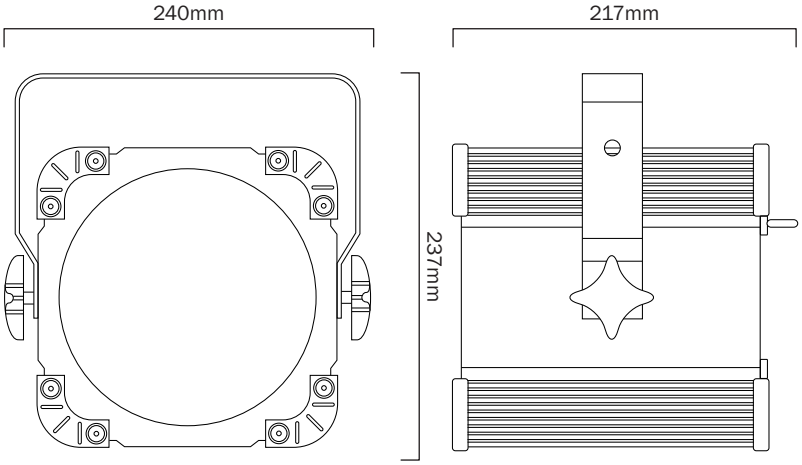

Specifications	
Power consumption	45W
Power supply	100~240V, 50/60Hz
Fuse	T1A 250V
Dimensions	237 x 240 x 217mm
Weight	3.1kg
Order codes	EQLED061

In the box: **1 x fixture, 1 x power cable & 1 x user manual**

01 - Hanging bracket
02 - Hanging bracket adjustment knob
03 - LED display
04 - Function buttons
05 - IEC power input
06 - IEC power output
07 - Fuse: T1A 250V
08 - 3-Pin XLR DMX input
09 - 3-Pin XLR DMX output
10 - Microphone
11 - Safety eye

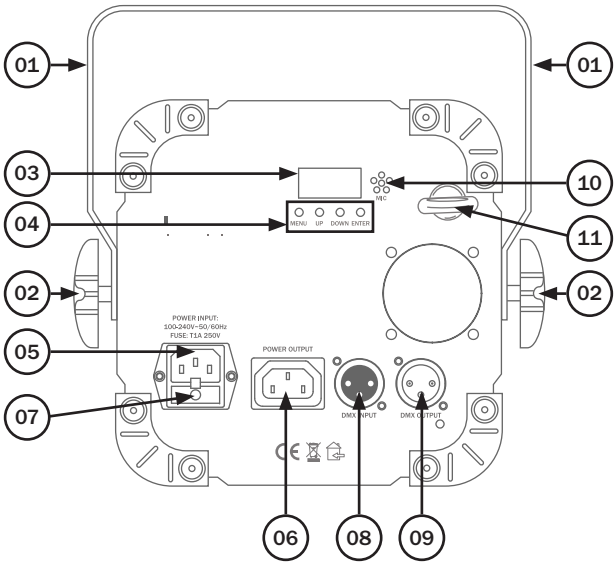

DMX mode:

To select the DMX address, press the "**MENU**" button on the rear of the unit to show A001 on the LED display. Now use the "**UP**" and "**DOWN**" buttons to select the DMX address between 001-512.
To exit out of any of the above options, press the "**MENU**" button.

8 channel mode:

Channel	Value	Function
1	000-255	Master dimmer (0-100%)
2	000-255	Red (0-100%)
3	000-255	Green (0-100%)
4	000-255	Blue (0-100%)
5	000-255	White (0-100%)
6	000-009	Strobe off
	010-255	Strobe speed (fast-slow)
7	000-005	Motor stop
	006-127	Motor clockwise rotation speed (slow-fast)
	128-255	Motor anti-clockwise rotation speed (fast-slow)
8	000-009	No function
	010-072	Auto mode 1 speed (slow-fast)
	073-134	Auto mode 2 speed (slow-fast)
	135-197	Auto mode 3 speed (slow-fast)
	198-220	Sound active mode 1
	221-225	Sound active mode 2

Auto mode:

To access the auto mode, press the "**MENU**" button on the rear of the unit to show between A1 - and A8 -. Use the "**UP**" and "**DOWN**" buttons to adjust the speed between A11~A19. Press the "**ENTER**" button to confirm the setting. To exit out of any of the above options, press the "**MENU**" button.

Sound active mode:

To access the sound active mode, press the "**MENU**" button on the rear of the unit to show either S1 - (Sound mode 1) or S2 - (Sound mode 2). Press the "**ENTER**" button to confirm the setting. To exit out of any of the above options, press the "**MENU**" button.

Master/slave mode:

To set the master unit, press the "**MENU**" button on the rear of the master unit to select your desired program (sound active or auto).
To set the other units in slave mode, press the "**MENU**" button on the rear of the unit to show A001 on the LED display. The unit will now run in sequence with the master unit.

To exit out of any of the above options, press the "**MENU**" button.

Menu system

Auto mode	A1 1~A1 9 Red - Speed A2 1~A2 9 Green - Speed A3 1~A3 9 Blue - Speed A4 1~A4 9 White - Speed A5 1~A5 9 Auto mode 1 - Speed A6 1~A6 9 Auto mode 2 - Speed A7 1~A7 9 Auto mode 3 - Speed A8 1~A8 9 Auto mode with strobe - Strobe speed
Sound active mode	S1 Sound mode 1 S2 Sound mode 2
Address setting	A001~A512
Slave mode	SLAU

Setting the DMX address:

The DMX mode enables the use of a universal DMX controller. Each fixture requires a “start address” from 1- 512. A fixture requiring one or more channels for control begins to read the data on the channel indicated by the start address. For example, a fixture that occupies or uses 7 channels of DMX and was addressed to start on DMX channel 100, would read data from channels: 100,101,102,103,104,105 and 106. Choose a start address so that the channels used do not overlap. E.g. the next unit in the chain starts at 107.

DMX 512:

DMX (Digital Multiplex) is a universal protocol used as a form of communication between intelligent fixtures and controllers. A DMX controller sends DMX data instructions form the controller to the fixture. DMX data is sent as serial data that travels from fixture to fixture via the DATA “IN” and DATA “OUT” XLR terminals located on all DMX fixtures (most controllers only have a data “out” terminal).

DMX linking:

DMX is a language allowing all makes and models of different manufactures to be linked together and operate from a single controller, as long as all fixtures and the controller are DMX compliant. To ensure proper DMX data transmission, when using several DMX fixtures try to use the shortest cable path possible. The order in which fixtures are connected in a DMX line does not influence the DMX addressing. For example; a fixture assigned to a DMX address of 1 may be placed anywhere in a DMX line, at the beginning, at the end, or anywhere in the middle. When a fixture is assigned a DMX address of 1, the DMX controller knows to send DATA assigned to address 1 to that unit, no matter where it is located in the DMX chain.

DATA cable (DMX cable) requirements (for DMX operation):

This fixture can be controlled via DMX-512 protocol. The DMX address is set on the back of the unit. Your unit and your DMX controller require a standard 3-pin XLR connector for data input/output, see image below.

Further DMX cables can be purchased from all good sound and lighting suppliers or Pro Light Concepts dealers.

Please quote:

CABL10 – 2m
CABL11 – 5m
CABL12 – 10m

Also remember that DMX cable must be daisy chained and cannot be split.

Notice:

Be sure to follow the diagrams below when making your own cables. Do not connect the cables shield conductor to the ground lug or allow the shield conductor to come in contact with the XLRs outer casing. Grounding the shield could cause a short circuit and erratic behaviour.

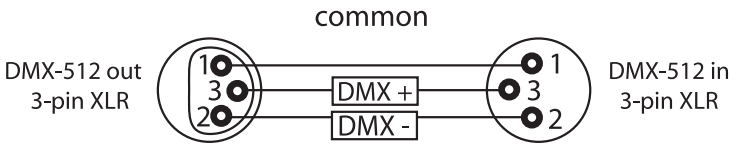

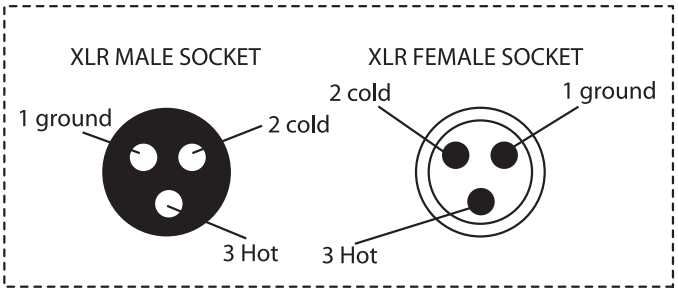

XLR Pin Configuration
Pin 1 = Ground
Pin 2 = Negative
Pin 3 = Postive

Special note:

Line termination:

When longer runs of cable are used, you may need to use a terminator on the last unit to avoid erratic behaviour.

Using a cable terminator will decrease the possibilities of erratic behaviour.

(3-pin - Order ref: CABL90, 5-pin - Order ref: CABL89)

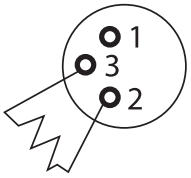

Termination reduces signal transmission problems and interferance. it is always advisable to connect a DMX terminal, (resistance 120 Ohm 1/4 W) between pin 2 (DMX-) and pin 3 (DMX+) of the last fixture.

5-pin XLR DMX connectors:

Some manufactures use 5-pin XLR connectors for data transmission in place of 3-pin. 5-pin XLR fixtures may be implemented in a 3-pin XLR DMX line. When inserting standard 5-pin XLR connectors in to a 3-pin line a cable adaptor must be used. The diagram below details the correct cable conversion.

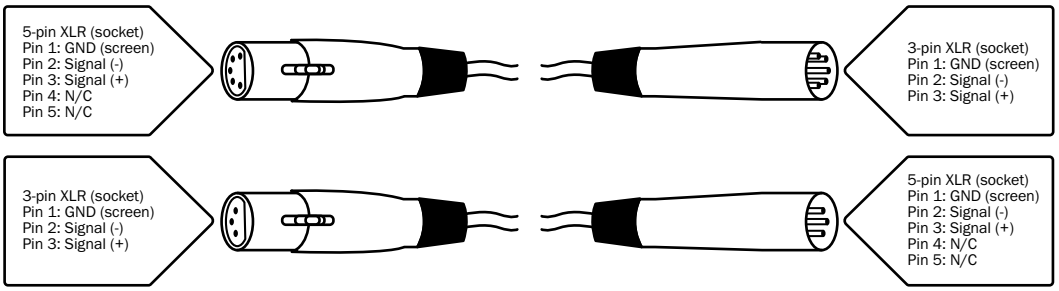

Correct Disposal of this Product (Waste Electrical & Electronic Equipment)

(Applicable in the European Union and other European countries with separate collection systems)

This marking shown on the product or its literature, indicates that it should not be disposed of with other household wastes at the end of its working life. To prevent possible harm to the environment or human health from uncontrolled waste disposal, please separate this from other types of wastes and recycle it responsibly to promote the sustainable reuse of material resources.

Household users should contact either the retailer where they purchased this product, or their local government office, for details of where and how they can take this item for environmentally safe recycling.

Business users should contact their supplier and check the terms and conditions of the purchase contract. This product should not be mixed with other commercial wastes for disposal.